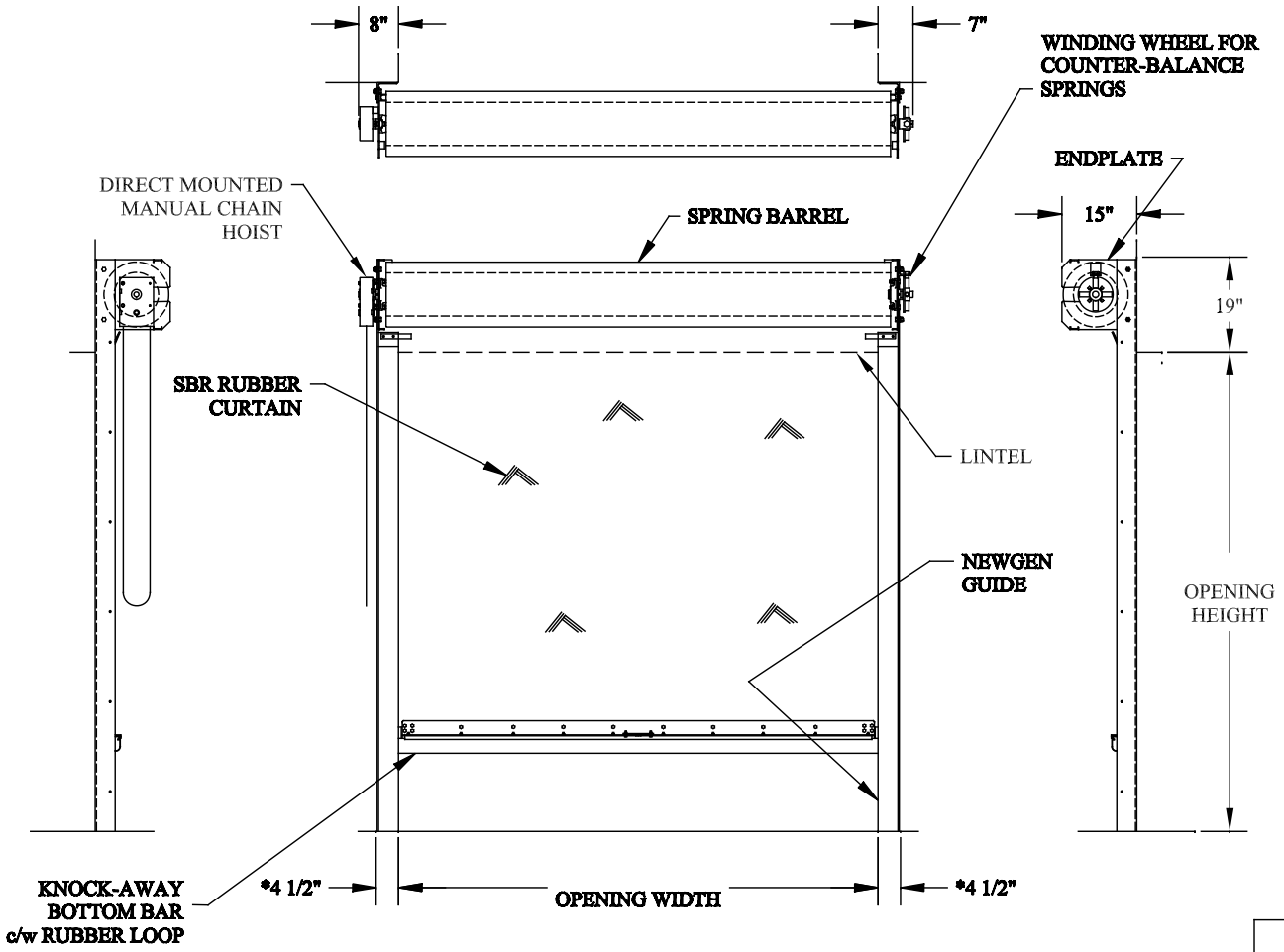

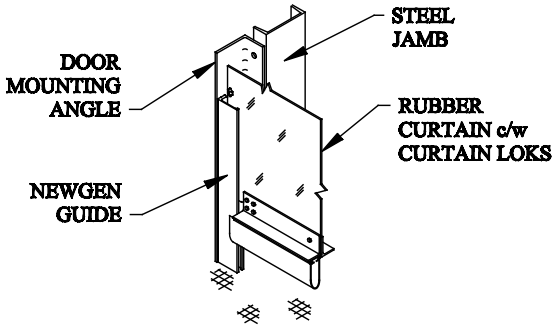

NEWGEN GUIDE AND CURTAIN LOK SYSTEM STEEL JAMB MOUNTING

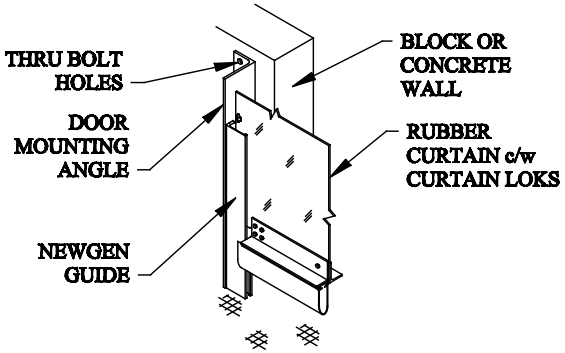

NEWGEN GUIDE AND CURTAIN LOK SYSTEM CONCRETE WALL MOUNTING *

* CLEARANCE DIMENSION IS 8 1/2" FOR CONCRETE MOUNT CONFIGURATION

MECHANICAL OPTIONS	-	STANDARD SYSTEM INCLUDES
☐ - VISION STRIPE BOTH SIDES OF CURTAIN	☐ -	- 25,000 CYCLE INBOARD COUNTERBALANCE SPRINGS
☐ - 16" x 16" WINDOWS, QTY. _____	☐ -	
☐ - GUIDE GUARDS	☐ -	- KNOCK-AWAY STYLE BOTTOM BAR
☐ - HOOD - ROLL COVER ONLY	☐ -	- 3" HIGH, BLACK EPDM RUBBER LOOP
☐ - BLUE EPDM CURTAIN	☐ -	- NEWGEN GUIDE AND CURTAIN LOK SYSTEM
☐ - GRAY EPDM CURTAIN	☐ -	-
☐ - AIR WAVE REVERSE EDGE c/w COIL CORD	☐ -	-
☐	☐ -	-
☐	☐ -	-
☐ -	☐ -	-
☐ -	☐ -	-
☐ -	☐ -	-

TNR INDUSTRIAL DOORS INC.

SHOP DRAWING, MODEL HDD, LEFT HAND

EXT. DETAIL:	MANUAL CHAIN HOIST & INBOARD C'BAL SPRINGS		
LIMITATIONS:	MAX. OPENING WIDTH 10', MAX. OPENING HEIGHT 12'		
DATE DR'N:	MAY 29, 2015	REVISION:	B - JUNE 26, 2017
DRAWN BY:	R.B.	DRAWING No.:	D-600-0125
ELECTRICAL CRITERIA:			
NOT APPLICABLE			
-			
OPERATOR CRITERIA:	DIRECT MOUNTED MANUAL CHAIN HOIST		
NOT APPLCABLE			
-			
END USER:			
DEALER:			
DOOR SIZE:		SERIAL No.:	TNR-